45W QR Flyback Evaluation Board

EVAL_45W_19V_FLYB_P7
800V P7 TO220 FullPAK
800V P7 DPAK

Jared Huntington(IFAT PMM ACDC AE)
Stefan Preimel (IFAT PMM ACDC AE)

Rev 1.0

Table of Contents

1 General Description

2 Efficiency Results

Copyright © Infineon Technologies AG 2016. All rights reserved.

Table of Contents

1 General Description

2 Efficiency Results

Copyright © Infineon Technologies AG 2016. All rights reserved.

General

Description:

This 45W adapter evaluation board is intended to be a form, fit, and function test platform for charger and adapter applications to show the operation of the 800V P7 CoolMOS™ as well as the overall controller design. The evaluation board is designed around a Quasi-Resonant (QR) Flyback topology for improved switching losses which allows higher power density designs and lower radiated and conducted emissions. A 45W universal input isolated Flyback demo board with a 19V output based on the ICE2QS03G controller and the P7 MOSFET is described in this application note and test results are presented.

Summary of Features:

- Output voltage: 19 VDC
- Output current max: 2.4A
- Peak Efficiency 230 V_{AC}, 45 W 91.4%
- Peak Efficiency 120 V_{AC}, 45 W 89.3%

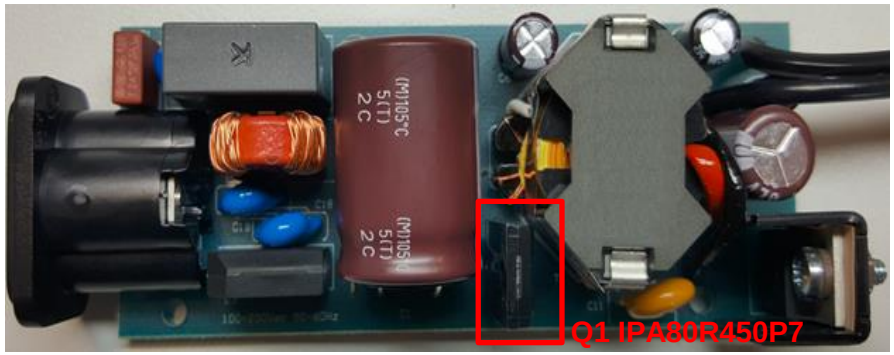

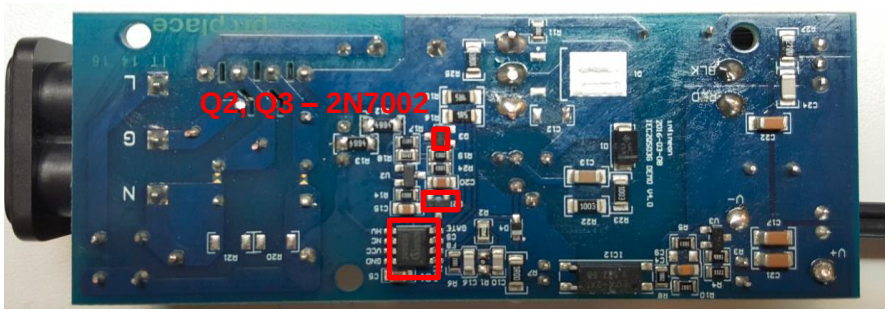

Copyright © Infineon Technologies AG 2016. All rights reserved.

Schematic

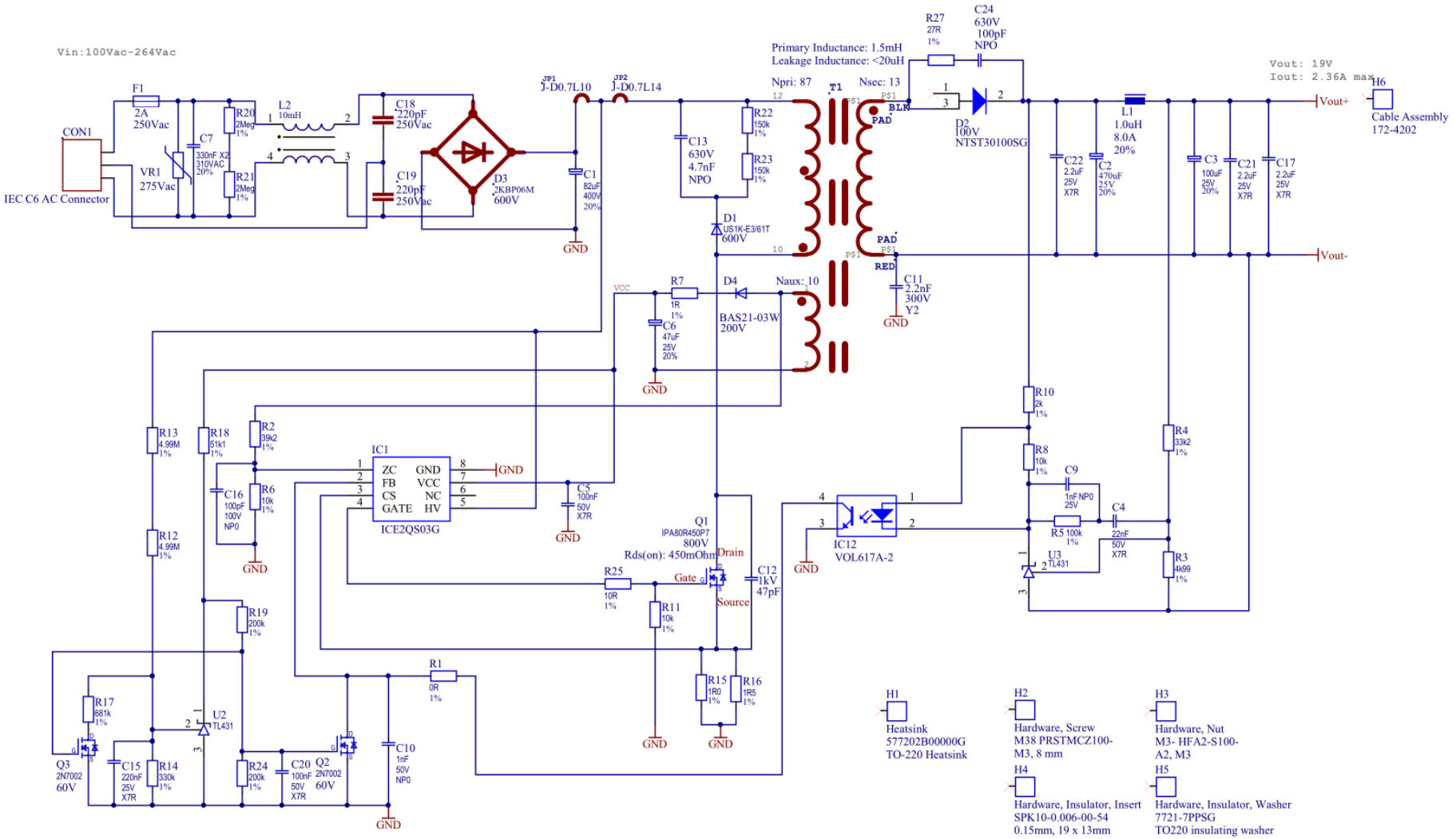

Copyright © Infineon Technologies AG 2016. All rights reserved.

Table of Contents

1 General Description

2 Efficiency Results

Copyright © Infineon Technologies AG 2016. All rights reserved.

Low line efficiency measured with IPA80R450P7

Vin =120VAC

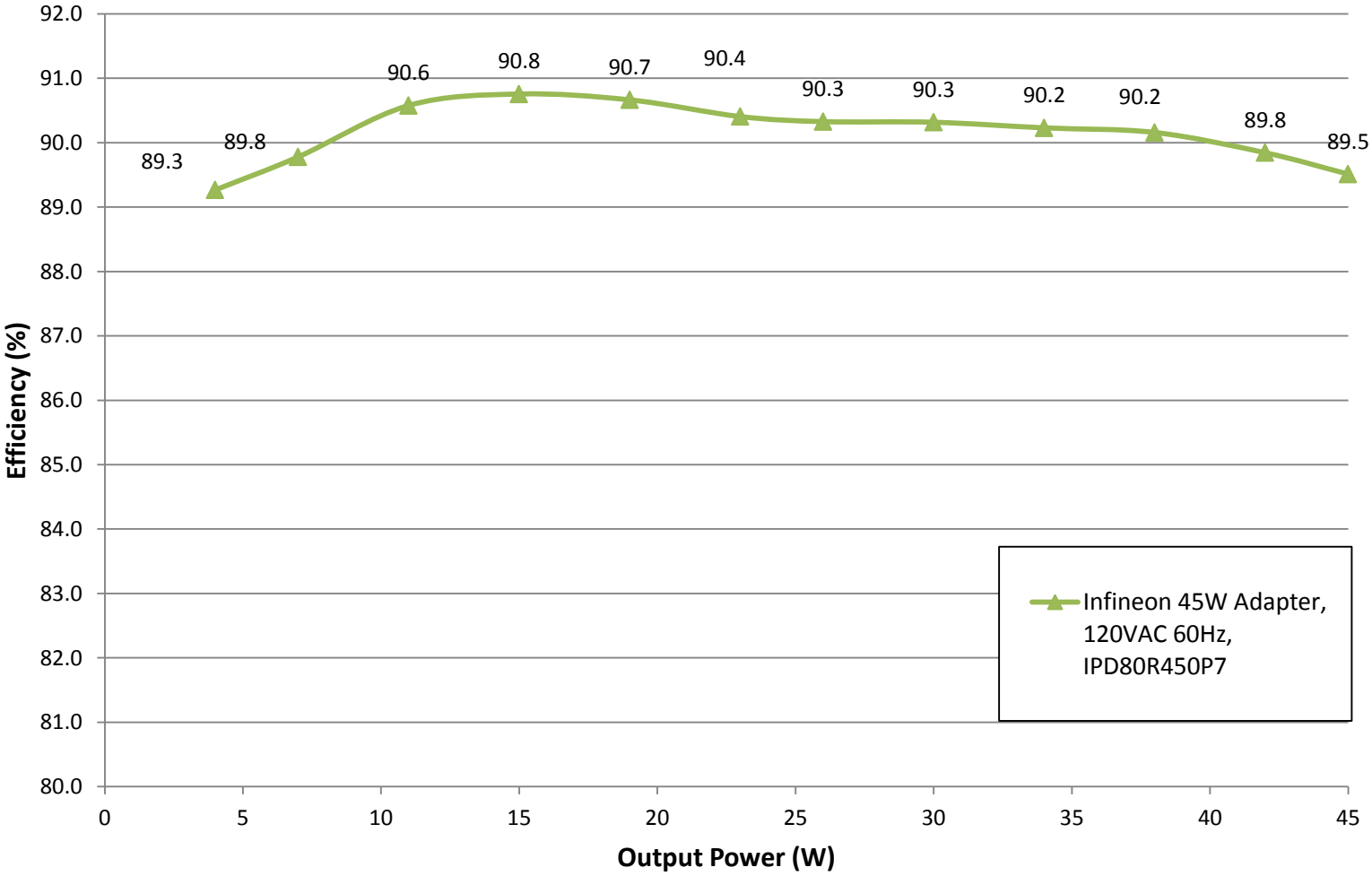

Copyright © Infineon Technologies AG 2016. All rights reserved.

High line efficiency measured with IPA80R450P7

Vin =230VAC

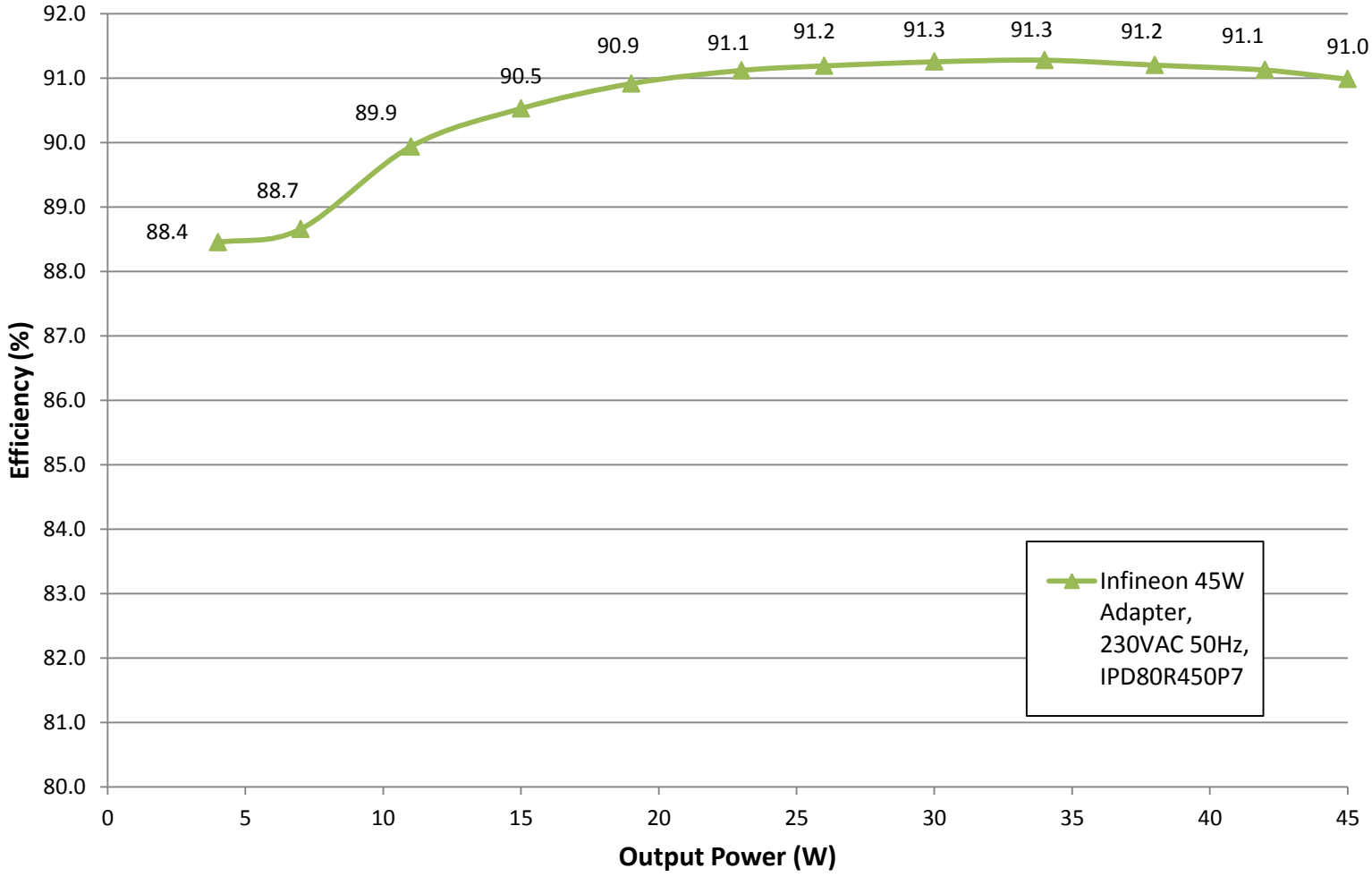

Copyright © Infineon Technologies AG 2016. All rights reserved.

Support Slides
45W Evaluation Board

Evaluation Board Page

- Technical Description
- Datasheets
- Parameters
- Related material
- Videos

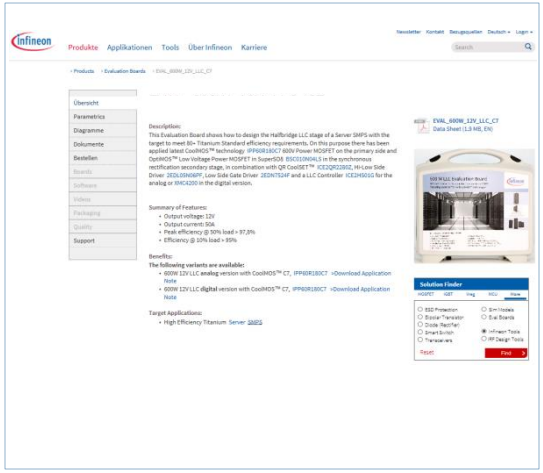

- EVAL_45W_19V_FLYB_P7

Product Family Pages

- Product Brief
- Application Notes
- Selection Guides
- Datasheets and Portfolio
- Videos
- Simulation Models



- IPA80R450P7
- ICE2QS03G
- 2N2002

Copyright © Infineon Technologies AG 2016. All rights reserved.



Part of your life. Part of tomorrow.

Infineon